Ultrasonic Gas Meters Verification

Rajive kumar E K . Research Scholar. Pacific University of Science ant Technology. Udaipur.

Abstract

Modern Ultrasonic Flow meters have built in diagnostic tools which will help the user to detect if there is any obstruction in meter tube, deterioration of meter performance or there are any issues effecting accuracy of gas flow metering. Performance of meter can be verified in field itself using the diagnostic techniques.

Introduction

Ultrasonic flow meter is widely used now for custody gas flow measurements. There are many advantages to this type of meter compared to other conventional flow meters. Ultrasonic flow meters have no moving part and do not restrict flow and create pressure drop. Accuracy, turndown ratio is better. It is Tolerance to wet gas and can be designed bi-directional especially useful in cross country pipe line gas flow metering. Apart from these advantages USM is having integral diagnostic features. Integral diagnostic features help user to evaluate meter performance and diagnose meter health.

Ultrasonic Meter Basics

Understanding of basic operation principle is helpful in evaluating meter performance. The basic operation philosophy is as described below.

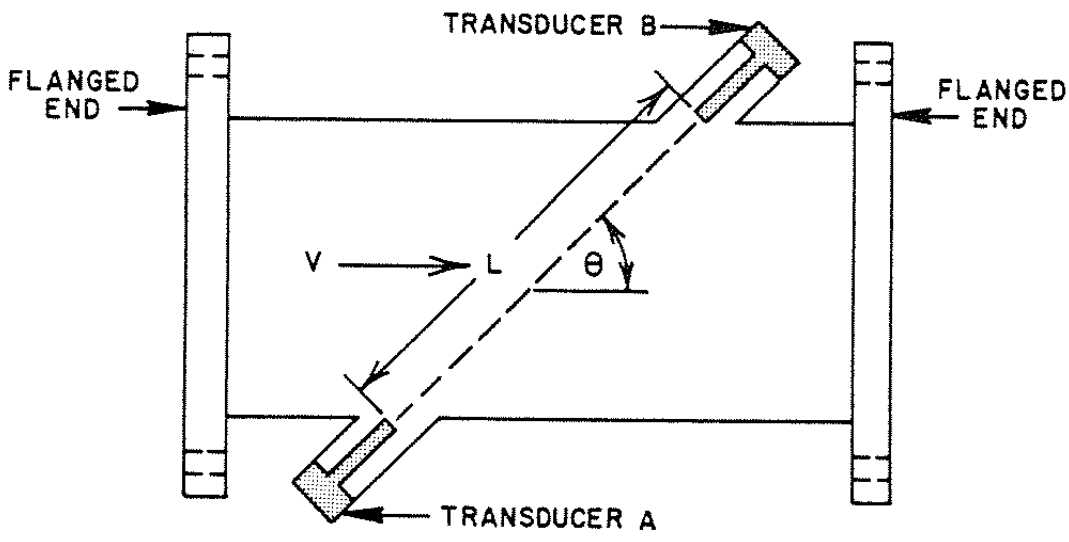

Figure 1 - Ultrasonic Meter

Ultrasonic flow meter calculate flow rate from velocity of fluid passing thru it.

T_{AB} = The transit time (T_{12}) of an ultrasonic signal travelling with the flow is measured from Transducer 1 to Transducer 2.
T_{BA} = The transit time from Transducer 2 to Transducer 1
T_{AB} will be higher than T_{BA} as the ultrasounds travels faster in flow direction.

L= Direct distance between two transducers.
X= lateral distance between two transducers.
C= Speed of Sound of the gas.
V = *T*he gas velocity
The following two equations would then apply for each path.

$T_{AB} = L/(C+ V*X/L)$----------(1)

$T_{BA} = L/(C- V*X/L)$----------(2)

Gas Velocity is obtained by:

$V= L^2/2X\ [(T_{BA}-T_{AB}) / T_{BA}*T_{AB})]$ ----(3)

Speed of Sound

Speed of sound

$C = L/2\ [(T_{BA}+T_{AB})/T_{BA}*T_{AB})]$--------(4)

From the equations it is clear that by measuring transit times we can compute the gas velocity and speed of sound. Dimensions X and L also required for the calculations.

Transit time is a function of speed of sound (which depends on pressure, temperature and gas composition), meter size and velocity of fluid. Accurate measurement of transit time difference is very important. Each transducer pair path will give velocity in the particular path. In order to calculate the average flow rate we require calculating average velocity of gas. There are different methodologies adapted by different manufacturers to calculate average velocity from individual path velocities.

Once average velocity is obtained we can calculate the uncorrected flow rate by following equation. .
$Q = V * A$ ---------- (5)
Where V is average velocity and A is cross sectional area of the meter.

Only variable in calculation of velocity equation is transit time and other parameters of the equation for velocity calculations are constants.

Diagnostics features of Ultrasonic Meters

There are multiple internal diagnostic features in ultrasonic flow meters. Following are the common internal meter diagnostics.

Gain

In normal healthy operations each path signals have comparable gain. An increase in gain of a particular path indicates possibility of transducer clogging, liquid in line etc. Depending upon metering pressure and temperature gain varies. Gas velocity also effect gain due to turbulence. The reduced signal strength causes the increase in gain. However huge variation in gain of certain

path indicates a clogged or contaminated transducer. Transducer contamination do not occur normal gas. A watch on gain will help to detect transducer contamination and take remedial actions early.

Performance/Signal Quality

Ultrasonic pulses transmitted from transmitter probe are received by receiver probe. It is possible that many pulses get rejected by receiver probe due to low signal quality, noise, distortion of pulses due to high gas velocity, contamination of transducer etc. The percentage reception or rejection of transmitted pulses by receiver is termed as performance or signal quality. Under normal operating conditions performance for each path is 100%. As gas velocity increases the performance come down. If the percentage of accepted pulses e very low (Say less than 50 %) inspection of USM operation is required.

Signal-to-Noise Ratio

Transducers are subjected to noise signals which monitored during the interval between pulses received. Major source of noise are control valves operating too close to USM and high pressure difference. During design stage itself steps to be taken to reduce noise effect. There are possible that electrical and RF noise also effect USM operation but probability is much less.

Velocity Profile

A good meter design results a uniform velocity profile. If there is any blockage or damage in flow profiler velocity profile will change from the healthy one. Thus by comparing flow velocity profile with healthy conditions it is possible to predict USM internal conditions.

Speed of Sound

Speed of sound is one the most commonly used diagnostic tool. Speed of sound is proportional to difference in transit times and inversely proportional to its product. So speed of sound verification gives a test of accuracy of transit times. Since speed of sound is depend on pressure and temperature of gas, gas composition. Temperature gas a significant effect on SOS. Also SOS of individual paths will give an indication of noise level in the USM operation as in some paths valid pulses will be undetected effecting SOS of that path due to high noise signals.

Conclusions

Ultrasonic flow meter have several advantages over conventional flow meters. They have no moving parts, they create no restriction in flow path. Ultrasonic flow meters have significant diagnostic features which is ideal for custody flow metering. Major diagnostic features available are Gain, signal to noise ratio, performance and speed of sound. By diagnosis of USM operation faults early we can avoid measurement error at earliest possible.

.

References:

1. Field Verification Procedures for Ultrasonic Gas Meters John Lansing
Daniel Industries Houston, Texas, USA
2. AGA Report No. 9, Measurement of Gas by Multipath Ultrasonic Meters, June 1998
3. AGA Report No. 8, Compressibility and Super compressibility for Natural Gas and Other Hydrocarbon Gases, July 1994