ACCIDENT DETECTION AND ALERTING SYSTEM

Afreen Fathima[1],Samreen Jameel[2], Pathan Ahmed khan[3]

[1,2] UG Scholar,Dept. of CSE,ISL Engineering College, Hyderabad.
[3]Associate Professor, Dept. of CSE, ISL Engineering College, Hyderabad

Abstract

The usage of auto mobiles has improved linearly over the past decade, which increased in the risk of human life. This is because due to the insufficient emergency facilities .In this paper we are using an alarm system which helps in improving the emergency system of the accident system. This system detects the accident occurrence and the coordinated of the accident are messaged to the rescue team .A switching system is used switch off in case there are no causality. The Accident is detected with the help of MEMS Sensor and Vibration Sensor. The Angle in which the car has rolled off is indicated through a message. This Application helps in providing feasible solution to the poor emergency facilitates.

CHAPTER 1 : INTRODUCTION

Definition of an Embedded System

An embedded system is a microprocessor-based computer hardware system with software that is designed to perform a dedicated function, either as an independent system or as a part of a large system. At the core is an integrated circuit designed to carry out computation for real-time operations.

Complexities range from a single microcontroller to a suite of processors with connected peripherals and networks; from no user interface to complex graphical user interfaces. The complexity of an embedded system varies significantly depending on the task for which it is designed.

Overview of an Embedded System Architecture

Every Embedded system consists of a custom-built hardware built around a central processing unit. This hardware also contains memory chips onto which the software is loaded.

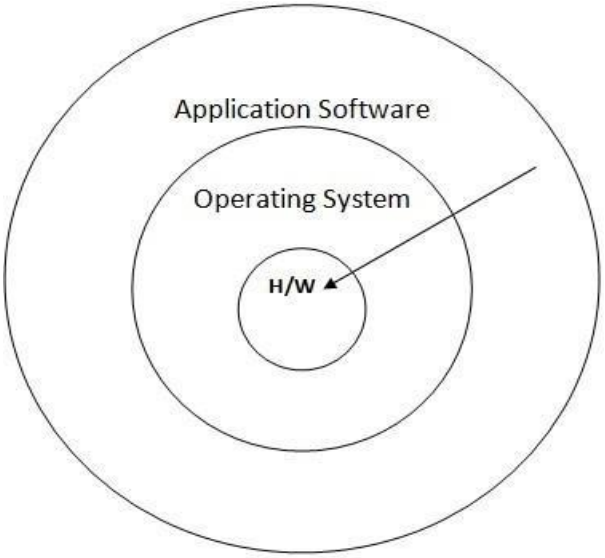

Fig 1.1 Hard ware and software application

The operating system runs above the hardware and the application software runs above the operating system. The same architecture is applicable to any computer including desktop computer. However these are significant differences. It is not compulsory to have an operating system in every embedded system. For small applications such as remote control units, air conditioners, toys etc.

Some of the most common embedded systems used in everyday life are

Small embedded controllers: 8-bit CPUs dominate, simple or no operating system

(e.g., thermostats)

Control systems: Often use DSP chip for control computations

(e.g., automotive engine control)

ACCIDENT DETECTION AND ALERTING SYSTEM

Distributed embedded control: Mixture of large and small nodes on a real-time Embedded networks (e.g., cars, elevators, factory automation)

System onchip: ASIC design tailored to application area (e.g., consumer electronics, set-top boxes)

Network equipment: Emphasis on data movement/packet flow (e.g., network switches; telephone switches)

Critical systems: Safety and mission critical computing (e.g., pacemakers, automatic trains)

Signal processing: Often use DSP chips for vision, audio, or other signal Processing (e.g., face recognition)

Robotics: Uses various types of embedded computing (especially Vision and Control) (e.g., autonomous vehicles)

Computer peripherals: Disk drives, keyboards, laser printers, etc.

Wireless systems: Wireless network-connected “sensor networks” and “Motes” to gather and report information

Embedded PCs: Palmtop and small form factor PCs embedded into Equipment

Command and control: Often huge military systems and “systems of systems” (e.g., a fleet of warships with interconnected

Computers)

CHAPTER 2

INTRODUCTION TO ACCIDENT DETECTION

The usage of automobiles has improved linearly over the past decade, which increased in the risk of human life. This is because due to the insufficient emergency facilities .In this paper we are using a alarmsystemwhichhelpsinimprovingtheemergencysystemoftheaccidentsystem.This system detects the accident to ccurrence and the co-ordinatedoftheaccidentaremessagedtotherescueteam.Aswitching system is used switch off in case there are no causality. The Accident is detected with the help of MEMS Sensor and Vibration Sensor. The Angle in which the car has rolled off is indicated through a message. This Application helps in providing feasible solution to the poor emergency facilitates.

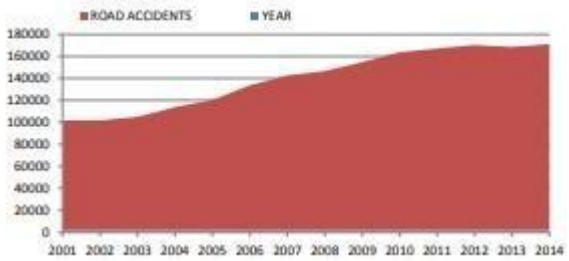

Fig 2.1: Road Accidents Year-wise 2001 – 2014

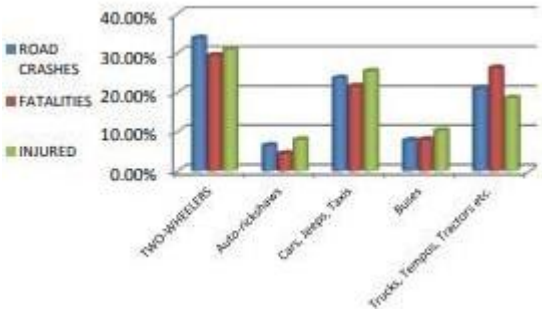

Fig 2.1.1: Road Accidents Based on Type

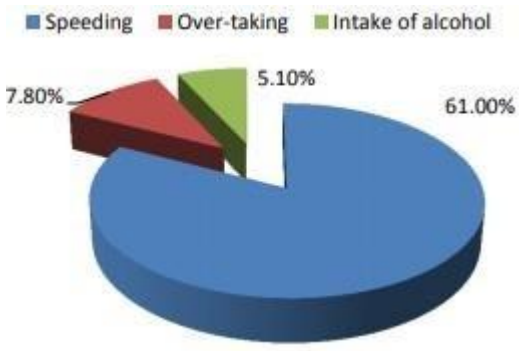

Fig 2.1.2: Road Accidents – CAUSE

In present days the rate of accidents can be increased rapidly. Due to employment the usage of vehicles like cars, bikes can be increased, because of this reason the accidents can be happened due to over speed. People are going under risk because of their over speed, due to unavailability of advanced techniques, the rate of accidents can't be decreased. To reduce the accident rate in the country this paper introduces a optimum solution. Automatic alert system for vehicle accidents is introduced; the main objective is to control the accidents by sending a message to the registered mobile using wireless communications techniques. When an accident occurs at a city, the message is sent to the registered mobile through GSM module in less time. Arduino is the heart of the system which helps in transferring the message to different devices in the system. Vibration sensor will be activated when the accident occurs and the information is transferred to the registered number through GSM module. GPS system will help in finding the location of the accident spot. The proposed system will check whether an accident has occurred and notifies to nearest medical centres and registered mobile numbers about the place of accident using GSM and GPS modules. The location can be sent through tracking system to cover the geographical coordinates over the area. The accident can be detected by a vibration sensor which is used as major module in the system.

The high demand of vehicles has also increased the traffic hazards and the road accidents. Life of the people is under high risk. This is because of the lack of best emergency facilities available in our country.Anautomaticalertsystemforvehicleaccidentsisintroducedinthispaper.Theproposedsystem which can detect accidents in significantly less time and sends the basic information to first aid centre.

within a few seconds covering geographical coordinates, the time and angle in which a vehicle accident had occurred. This alert message is sent to the central emergency dispatch server in a short time so that the emergency dispatch server will inform to the ambulances which are near to that location, which will helpinsavingthevaluablelives.ASwitchisalsoprovidedinordertoterminatethesendingofamessage inrarecasewherethereisnocasualty,thiscansavetheprecioustimeoftheambulance.Whentheaccident occurs the alert message is sent automatically to the central emergency dispatch server. The message is sentthroughtheGSMmoduleandthelocationoftheaccidentisdetectedwiththehelpoftheGPSmodule. The accident can be detected precisely with the help of vibration sensor. This application provides the optimum solution to poor emergency facilities provided to the roads accidents in the most feasibleway.

Statistics show that the leading cause of death by injury is road traffic accidents. A survey report by World Health Organization highlights that every year more than 30,000 people in Pakistan are died due to road traffic accidents [1]. There are number of causes for which an accident can occur, some of them are; lack of training institutes, use of mobile phone while driving, unskilled drivers, driving while intoxicated, bad road condition, overloading, and poor traffic management[2].However, most of the time ithasbeenobservedthatthedeathsoccuredintheroadaccidentareduetothelatearrivaloftheambulance to the accident spot. Although in most cases the injury is not severe and we could save the affected lives, however, due to late arrival of the rescue team, the injuries turn fatal. In this survey paper, we briefly review selected road accident detection techniques and propose a solution. In these techniques, a system is used that can automatically detect an accident in appreciably less amount of time and sends the basic informationabouttheaccidenttotheemergencycentre.Thesetechniquesusesmartphone,GSM and GPS, VANET and mobile applications. In smart phone-based accident detection, the Internet services provided byacellularnetworkoperatorareusedtosendtheinformationincaseofroadaccident.Thegeographical location of the accident spot is identified by the GPS system. In GSM and GPS based accident detection system; GSM cellular technology is used to send the data in case of road accident. The location of the accident spot is identified by the GPS system. In VANET-based accident detection system, in case of an accident, information to the emergency department is sent using the VANET-an ad-hoc network between moving vehicles. The location of the accident spot is identified by the GPS system. In mobile

based accident detection system, when an accident occurs, a mobile application, e CALL for example, detects the accident automatically and makes a call to the emergency services using mobile network operator. Table I shows the features and limitations of above described accident detection methods. We propose a solution to road accident detection problem with two ultrasonic sensors attached to embedded system. One sensor is placed at the front side of the car and another is at the back. When an accident happens, respective ultrasonic sensor detects it and sends this information to emergency service.

Every year in India around 1214 road accidents occur and about 377 casualties happen every day [8]. Maximum of the accidents result in deaths as ambulance is not called immediately and as people do not inform the ambulance to avoid police interrogation. The accident might occur at an isolated location wherepeoplearenotpresenttoreporttheaccident.Recenttechnologiesinvehicleshaveinbuilthardware modulestospotandreportaccidents.Suchsystemsareexpensiveandnon-portable.Notallcarshavesuch systems, only luxury cars have such facility. Hence we introduce Accident Detection and Alert System (ADAS) which will identify the accident with the help of sensors in the Smartphone. Since many Smartphonehavethebasicrequiredsensorsandgoodcomputingpower,theycouldbeemployedtodetect accidents and request response. As compared to hardware add-ons, Smartphone are portable - we could carry them in any vehicle we are driving or even travelling in. The way we would use their sensors will make this system inexpensive and lifesaving. The processes to detect accidents could be updated easily and has more scope for forthcoming enhancements. As we are using Smartphone for communication we could

use multiple ways of communicating with server, i.e. if the internet connectivity is not available the SMScouldbeusedtoconversewiththeserverforhelp.TheprincipalobjectiveofADASistosuccessfully detect accidents and communicate the same to ensure that the medical assistance can reach the accident locationontime.Thedatafromthissystemcouldbeusedtoanalyzeandstudytheaccelerationwaveforms generated during the accidents.

Quick development in populace has expanded the interest of vehicles, in this occupied and quick movinglifemishapsmayhappenanytimeoftime.Numerousindividualslosetheirlifeinmishapsbecause of the absence of medical aid or crisis administrations. In India, mishaps are the significant wellspring of death

just as wounds [1].AspertheNationalCrimeRecordsBureau2016report,therewere496,762

streets,railroadsandraillinecrossing-relatedcarcrashesin2015[2].ReportsfromAutocarproexpress, that on regular routine street mishaps have taken 405 lives and harmed 1020 individuals in 2017 [3]. On yearly premise, 1.5 lakh individuals are seen to have passed on in mishaps by a study directed by WHO [4].Therehavebeencircumstanceswheredelayincrisisadministrationshaveadditionallycausedpassing [5]. Since anticipation of mishaps is not in our grasp, we expect to give crisis benefits as quickly as time permitsthroughourtask.Inthistaskweintendtofollowthevehicle,soatanyplacethemishaphappens, sincethevehicleisunderfollowing,promptlythespotofmishapcanbefollowedandsenttocrisiscontacts in a couple of moments seconds so that the closest medical clinic can arrive at the spot as quickly astime permits and spare the life of the individual. On the off chance that the mishap is not extreme, we give a key which lets the driver end the framework, with the goal that the message has not been sent consequently helping in sparing the hour of rescue vehicle. The message is sent through GSM MODULE and the area is followed by GPS module. The mishap is recognized with the assistance of accelerometer sensor. The accelerometer is utilized as an accident or rollover identifier of the vehicle during and after an accident. With signals from an accelerometer, a seriousness of the mishap can be perceived. This venture gives answer for some serious issues. Vehicle following framework furnishes security to vehicles and furthermore with the assistance of GPS an individual can follow his vehicle and discover the vehicle development and its past exercises. Mishap ready framework primarily means to spare the valuable existence to the individuals. The gear is little and can be fit into any vehicle effectively. Taken vehicle recuperation will be simpler since we are following the vehicle. A basic framework can be utilized for different purposes.

The Accident Detection and Alert System using Arduino is very sufficient and worthy to be implementedinthevehiclespeciallyindevelopingcountrylikeNepal,India,Bangladeshetc.Accidentis increasing due to increase in number of vehicles as a result every year the number of death is increasing. The Accident Detection and Alert System using Arduino prevent the uncertain death after accident because this system send the message alert to the hospital or police station. The message alert include longitude, latitude (location of accident), in the form of google maplink.

In our previous tutorials, we have learned about How to interface GPS module with Computer, how to build a Arduino GPS Clock and how to Track vehicle using GSM and GPS. Here in this project,

ACCIDENT DETECTION AND ALERTING SYSTEM

we are going to build a Arduino based vehicle accident alert system using GPS, GSM and accelerometer**.** Accelerometer detects the sudden change in the axes of vehicle and GSM modules end the alert message on your Mobile Phone with the location of the accident. Location of accident is sent in the form of Google Map link, derived from the latitude and longitude from GPS module. The Message also contains the speed of vehicle in knots. See the Demo Video at the end. This Vehicle Accident alert project can also be used as a Tracking System and much more, by just making few changes in hardware and software.

CHAPTER 3

LITERATURE SURVEY

From the past event and the existing approach the below Drawback are been noted:

1. Manual system is adopted.

2. Tracking of accident is a crucial process in the system.

3. Required medical attention cannot be given to the needed person.

4. Life loss and Property loss were not stopped in large scale.

Considering all the drawbacks into account we have formulated a proposed system which covers all the above mentioned drawbacks.

1. Automated system is used once the accident occurs.

2. This system gives the Latitude and Longitude of the system accident occurred area without any delay.

3.More Human life can be saved using this automated system.

To protect the vehicle and tracking so many advanced technologies are available now a days. In olden days the information of accident can be transferred, but the place of accident spot cannot be identified. In any vehicle airbags are designed, air bags are used for security and safety travels [2]. The air bag system was introduced in the year of1968.

- TPMS is system designed to control the pressure inside the pneumatic tires on vehicles that provides different operating conditions such as a lower tire pressure is desired in order to maximize traction, maneuvering through challenging terrain, pulling a heavy load out of an incline at slow speeds, crawling out of soft dirt. The pressure ranges from 15 to 45PSI.

- Many other systems have been proposed to deduce the accident. The existing system deals with two sensors where MEMS sensor is used to detect the angle and vibration sensor is used for detection the change in the vehicle.

- The other existing system uses IOT and cloud computing system. Where the vehicle detection id done through SVM (support vehicle machine) that is developed by Ant Colony Algorithm (ACA). Here IOT will monitor the vehicles using magneto resistive sensors. The main aim of this project is to differentiate the accidents which took place in traffic and at no traffic place.

- Existing system also provides the location of the accident using at mega 328 Micro controller and RF transmitter and receiver. The information is sent to the saved mobile numbers [3].

This vehicle tracking system takes input from GPS and sends it through the GSM module to desired mobile/laptop using mobile communication. Vehicle Tracking System is one of the biggest technological advancements to track the activities of the vehicle. The security system uses Global Positioning System GPS, to find the location of the monitored or tracked vehicle and then uses satellite or radio systems to send to send the coordinates and the location data to the monitoring centre. At monitoring centre various software's are used to plot the Vehicle on a map. In this way the Vehicle owners are able to track their vehicle on a real-time basis. Due to real-time tracking facility, vehicle tracking systems are becoming increasingly popular among owners of expensive vehicles.

CHAPTER 4

EXISTING AND PROPOSED SYSTEM

Existing system:

Presently a lot of methodologies are available in vehicles that allow vehicle protection and tracking. Airbags are one of the most mandatory elements in vehicles. Front airbags have been standard on all new cars since 1998 and light trucks since 1999. Seat belts are also available in four wheelers.tire-pressure monitoring system (TPMS) is an electronic system designed to monitor the air pressure inside the pneumatic tires on various types of vehicles. TPMS report real time tire-pressure information to the driver of the vehicle, either via a gauge, a pictogram display, or a simple low pressure warning light. An anti-lock braking system or anti-skid braking system (ABS) is an automobile safety system that allows the wheels on a motor vehicle to maintain tractive contact with the road surface according to driver inputs while braking, preventing the wheels from locking up (ceasing rotation) and avoiding uncontrolled skidding. Traction control and electronic stability control go hand in hand and is designed to prevent loss of traction of driven road wheels. The latest implementation techniques move along the lines of providing help to the driver even if he is trapped in a remote location unable torespond.

Proposed system:

This system is very efficient and hence worthy to be implemented. Accident detection and messaging system can be fitted in vehicle (Ambulance, Police or to the communication device of the near and dear) and they are informed about any such untoward incident at the go. Accident detection and messaging system is executions impalas the system makes use of GSM & GPS technologies. GPS is used for taking the coordinate of the site of the accident while GSM is used for sending the message to phone. To make this process all the control is made using Arduino whereas LCD is used to display the accident.

CHAPTER 5

IMPLEMENTATION

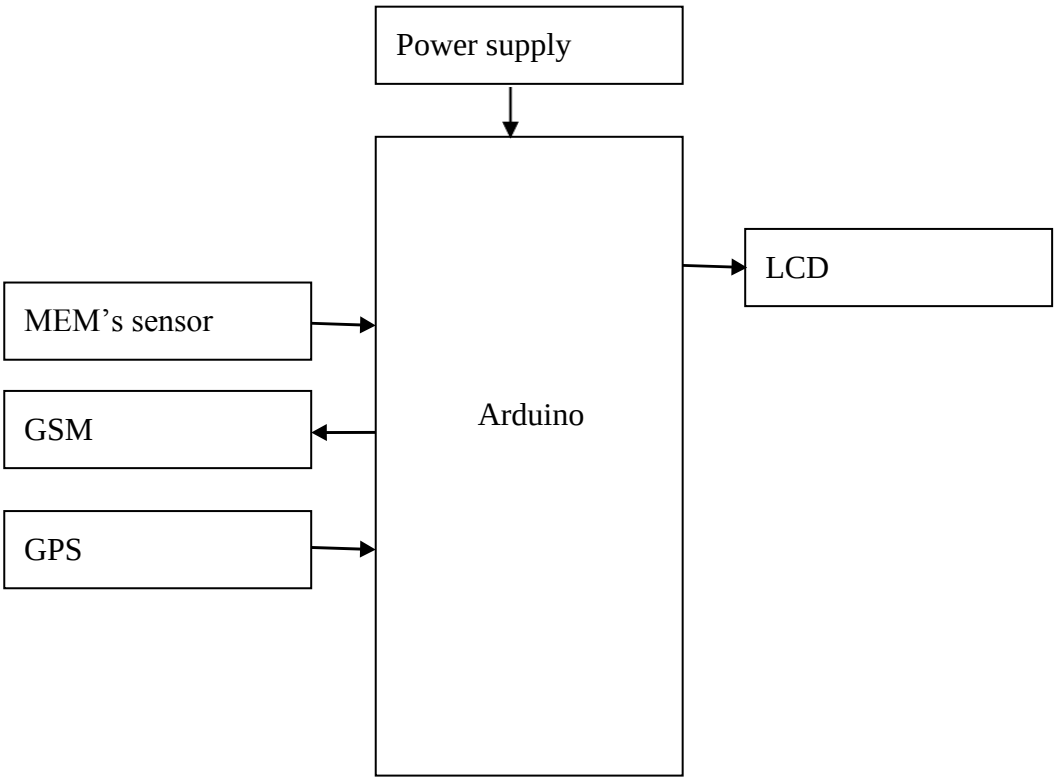

Fig.5.1: Block diagram

Hardware requirements:

- Arduino
- Power supply
- MEM's sensor
- GSM
- GPS
- LCD Arduino

Introduction to the Arduino Board

The Arduino is a family of microcontroller boards to simplify electronic design, prototyping and experimenting for artists, hackers, hobbyists, butal so many professionals. People use it as brains for their robots, to build new digital music instruments, or to build a system that lets your house plants tweet you when they're dry. Arduinos (we use the standard Arduino Uno) are built around an AT mega microcontroller essentially a complete computer with CPU, RAM, Flash memory, and input/output pins, all on a single chip.

Unlike, say, a Raspberry Pi, it's designed to attach all kinds of sensors, LEDs, small motors and speakers,servos,etc.directlytothesepins,whichcanreadinoroutputdigitaloranalogvoltagesbetween 0and5volts.TheArduinoconnectstoyourcomputerviaUSB,whereyouprogramitinasimplelanguage (C/C++,similartoJava)frominsidethefreeArduinoIDEbyuploadingyourcompiledcodetotheboard. Once programmed, the Arduino can run with the USB link back to your computer, or stand-alone without it no keyboard or screen needed, justpower.

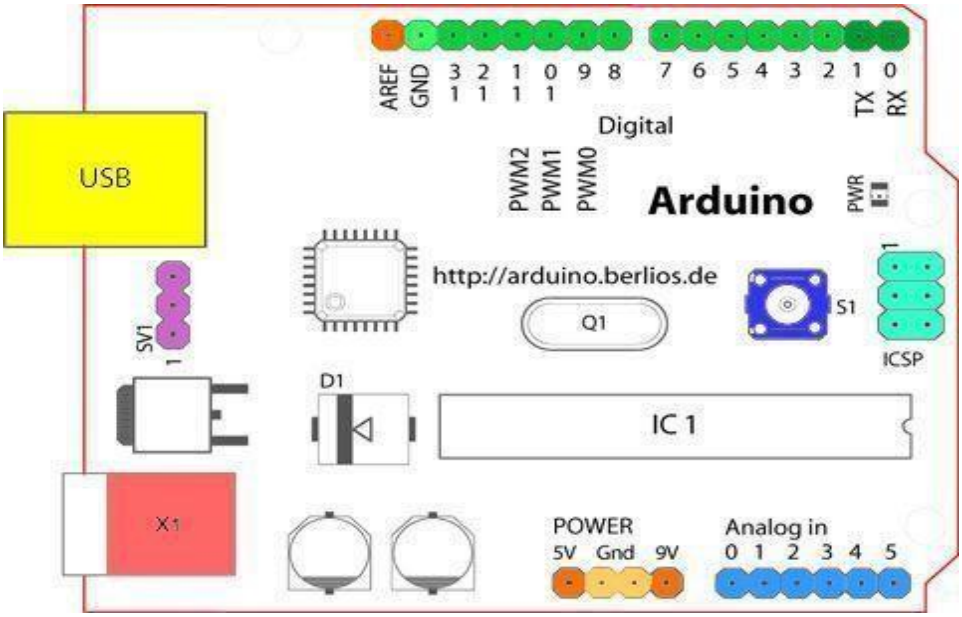

Fig.5.2: Structure of Arduino Board

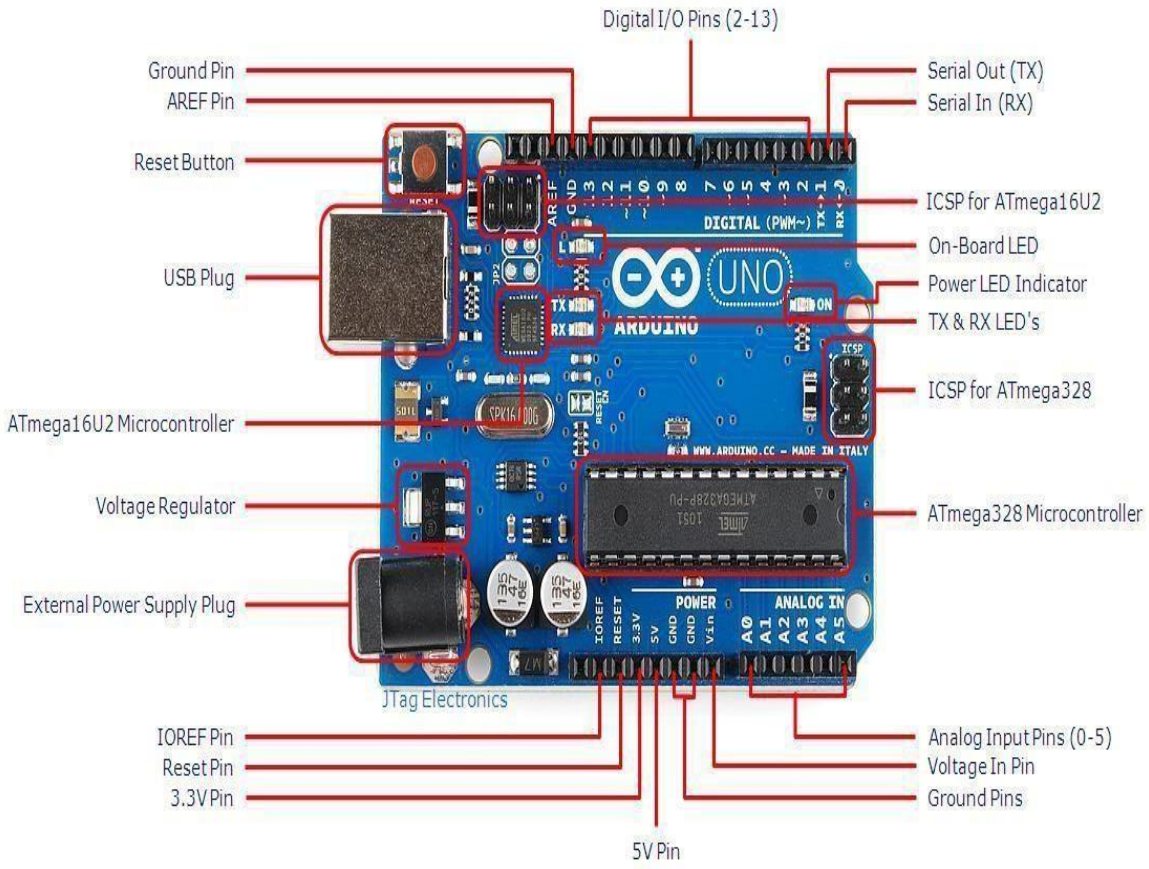

Fig.5.3: Arduino Board

Looking at the board from the top down, this is an outline of what you will see (parts of the board you might interact with in the course of normal use are highlighted).

Starting clockwise from the top centre:

- Analog Reference pin(orange)
- Digital Ground (lightgreen)
- Digital Pins 2-13(green)

- Digital Pins 0-1/Serial In/Out - TX/RX (dark green) - These pins cannot be used for digital i/o (Digital Read and Digital Write) if you are also using serial communication (e.g. Serial.Begin)
- Reset Button - S1 (darkblue)
- In-circuit Serial Programmer(blue-green)
- Analog In Pins 0-5 (lightblue)
- Power and Ground Pins (power: orange, grounds: light orange)
- External Power Supply In (9-12VDC) - X1(pink)
- Toggles External Power and USB Power (place jumper on two pins closest to desired supply) - SV1(purple)
- USB (used for uploading sketches to the board and for serial communication between theboard and the computer; can be used to power the board)(yellow)

Digital Pins

In addition to the specific functions listed below, the digital pins on an Arduino board can be used for general purpose input and output via the pin Mode(),Digital Read(),and Digital Write()commands. Each pin has an internal pull-up resistor which can be turned on and off using digital Write() (w/ a value of HIGH or LOW, respectively) when the pin is configured as an input. The maximum current per pin is 40mA.

- **Serial: 0 (RX) and 1 (TX).** Used to receive (RX) and transmit (TX) TTL serial data. On the Arduino Diecimila, these pins are connected to the corresponding pins of the FTDI USB-to-TTL Serial chip. On the Arduino BT, they are connected to the corresponding pins of the WT11Bluetooth module. On the Arduino Mini and Lily Pad Arduino, they are intended for use with an external TTL serial module (e.g. the Mini-USBAdapter).
- **ExternalInterrupts:2and3.** These pins can be configured to trigger an interruptional value, arising or falling edge, or a change in value. See the attach Interrupt()function fordetails.
- **PWM: 3, 5, 6, 9, 10, and 11** Provide 8-bit PWM output with the analog Write()function. On boards with an ATmega8, PWM output is available only on pins 9, 10, and11.
- **BT Reset: 7.**(Arduino BT-only) Connected to the reset line of the Bluetooth module.
- **SPI:10(SS),11(MOSI),12(MISO),13(SCK).**ThesepinssupportSPIcommunication,which, although provided by the underlying hardware, is not currently included in the Arduinolanguage.
- **LED: 13.** On the Diecimila and Lily Pad, there is a built-in LED connected to digitalpin 13. When the pin is HIGH value, the LED is on, when the pin is LOW, it's off.

Analog Pins

In addition to the specific functions listed below, the analog input pins support 10-bit analog-to-digital conversion (ADC) using the Analog Read()function. Most of the analog inputs can also be used as digital pins: analog input 0 as digital pin 14 through analog input 5 as digital pin 19. Analog inputs 6 and 7 (present on the Mini and BT) cannot be used as digital pins.

Power Pins:

- VIN (sometimes labeled "9V"): The input voltage to the Arduino board when it's using an external power source (as opposed to 5 volts from the USB connection or other regulated power source). You can supply voltage through this pin, or, if supplying voltage via thepower jack, access it through this pin. Also note that the Lily Pad has no VIN pin and accepts only a regulated input.**5V:** The regulated power supply used to power the microcontroller and other components on the board. This can come either from VIN via an on-board regulator, or be supplied by USB or another regulated 5Vsupply.
- **3V3** (Diecimila -only) :A 3.3 volt supply generated by the on-board FTDIchip.
- **GND:** Groundpins.

Other Pins

- **AREF:** Reference voltage for the analog inputs. Used with analog reference().

Reset: (Diecimila-only) Bring this line LOW to reset the microcontroller. Typically used to add are set button to shields which block the one on the board.

Power supply:

In mains-supplied electronic systems the AC input voltage must be converted into a DC voltage with the right value and degree of stabilization. In these basic configurations the peak voltage across the load is equal to the peak value of the AC voltage supplied by the transformer’s secondary winding. For most applications the output ripple produced by these circuits is too high. However, for some applications - driving small motors or lamps, for example - they are satisfactory. If a filter capacitor is added after the rectifier diodes the output voltage waveform is improved considerably. The section b- c is a straight line. During this time it is the filter capacitor that supplies the loadcurrent.

The slope of this line increases as the current increases, bringing point c lower. Consequently the diode conduction time (c-d) increases, increasing ripple. With zero load current the DC outputvoltage isequaltothepeakvalueoftherectifiedACvoltage.Figureshowshowtoobtainpositiveandnegative outputs referred to a common ground. In particular they are helpful in determining the voltage ripple for a given load current and filter capacitor value. The value of the voltage ripple obtained is directly proportionaltotheloadcurrentandinverselyproportionaltothefiltercapacitorvalue.Theperformance of a supply commonly used in consumer applications – in audio amplifiers.

Oftenthedegreeofstabilityprovidedbythecircuitsdescribedaboveisinsufficientandastabilizer circuit is needed. This circuit is often used as a reference voltage to apply to the base of a transistor of to the input of an op amp to obtain higher output current. The simplest example of a series regulator is shown in Figure. In this circuit the transistor is connected as a voltage follower and the output voltage is about 600 - 700mV lower than the zener voltage.

The resistor R must be dimensioned so that the zener is correctly biased and that sufficient base current is supplied to the base of Q1. For high load currents the base current of Q1 is no longer negligible. To avoid that the current in the zener drops to the point where effective regulation is not possible a Darlington may be used in place of the transistor. When better performance is required the op amp circuit shown in Figure is recommended. In this circuit the output voltage is equal to the reference voltage applied to the input of the op amp. With a suitable output buffer higher currents can be obtained. The output voltage of the Figure 14 circuit can be varied by adding a variable divider in parallel with the zener diode and with its wiper connected to the op amp’s input.

The design of stabilized supplies has been simplified dramatically by the introduction of voltage regulator ICs such as the L78xx and L79xx - three-terminal series regulators which provide a very stable output and include current limiter and thermal protection functions. Regulated power supply is mainlyusedtoprovidingpowertothisprojectbecauseitisprovidingregulateddcpowerandit converts 220v ac supply into regulated dc power of 5v, 9v, 12v, 15v etc. Regulated power supply consists of step down transformer, bridge rectifier which is combination of 4 diodes connected in bridge shape. Bridge rectifier has the maximum efficiency and it is best than other rectifiers that’s why we preferit.

This rectifier converts ac into pulsating dc. After rectifier filter circuit is employed, usually capacitor in parallel is used as filter or we can use number of capacitors in parallel and number of inductors in series. All these filters are low pass filters as we required dc at the o/p. Then after capacitor voltage regulator is used for observing the pure dc o/p. We can use various voltage regulators for obtaining pure dc o/p but we prefer 78xx series voltage regulators as they are simpler, cheaper and easier than others.

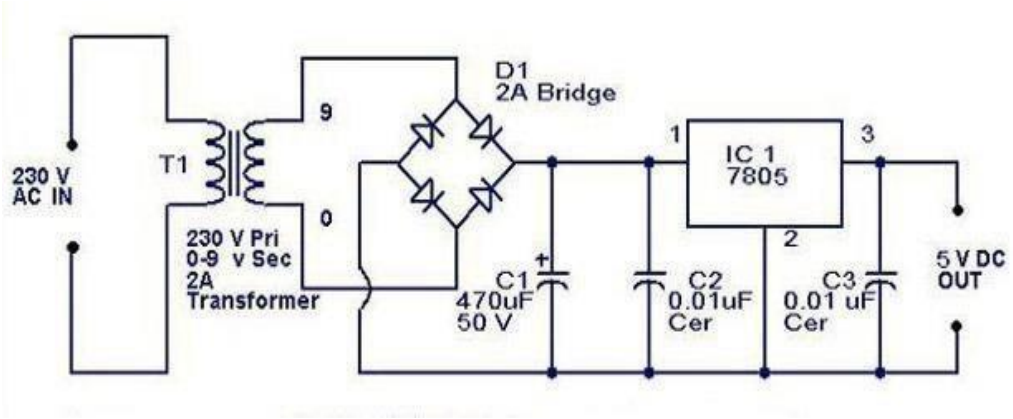

Fig. 5.4: Circuit diagram of regulated power supply section

(1) **AC Input:** This is the input supply from the public utility where the device will be energized. It is also supplied directly to the relay contacts in the device which connects the load to thesupply when the supply is within 200V – 240Vrange.

(2) **Step down transformer:** It steps down the AC supply into 5v on the secondary side. It is therefore a 230/5 v transformer. Any change in the primary reflects in the secondary of the transformer. So any fluctuations in the input are also reflected as a fluctuation in theoutput.

(3) **Rectifier:** A centre tapped transformer, with four diodes for full wave rectification is used to convert the ac voltage to a pulsating dc voltage followed by a filter, comprising of a capacitorto filter out (smooth) the pulsation. After the rectification and smoothening, a sample of the output voltage is fed to the micro controller. This voltage is unregulated and therefore varies as the input mains voltage varies. Since the system is to prevent against over voltage, the transformer was designed and the windings were so selected for the device to be able to sense and withstand input mains voltage up to600Vac.

Mems sensor:

It is evident that the number of microscale sensors in our environment is set to increase. In some markets they are well established such as pressure sensors, gyroscopes and ink jet nozzles, which currently account for two thirds of the MEMS sensors market (Nexus, 2005). One of the reasons for the success of MEMS technology is that the largest enabling technology, the integrated circuit industry, isalreadymature.IntelfounderGordonMoore'sprediction,popularlyknownasMoore'slaw(Moore, 1965),whichpredictsthatthenumberoftransistorsonachipdoubleseveryeighteenmonthsisrelevant toMEMSsensorsinthat,notonlydoesmanufacturingcapabilityincrease,butalsothecostpersensor will reduce significantly making MEMS sensors an increasingly attractive option. MEMS are able to reduce the size, weight, power consumption, whilst increasing reliability and performance of existing macroscopic devices. Through MEMS it is also possible to make devices previously not possible at a macroscopicscale.

As with other MEMS technologies MEMS packaging is primarily derived from the IC industry. However, the requirements on MEMS packaging are more stringent than for microelectronics. This is because hermeticity, and stresses and strains are tolerable within microelectronics, providing they do not affect the device reliability. However, these parameters will directly affect the performance of a MEMS sensor. Therefore, MEMS packaging needs to be specific to its application, encompassing design, material selection and processes (Beeby et. al., 2004, Reichl and Grosser, 2001), as this will directly dictate the functional performance and reliability requirements of the packaged device. Common technical challenges faced when packaging include: cost, size, package stresses, electrical shielding, tolerance to foreign particles and hermeticity. MEMS packaging costs account for 70% to 90% of the device compared to 30% to 95% for an IC device (Evans, 2004). The primary drivers for increased cost in MEMS packaging include: package stress, particle protection during manufacturing, hermeticity requirements and lower production volumes. Design modelling of packaging will help designers remove redundant features in MEMS component packages and help drive cost down. However, accurately modeling total system performance is challenging when combining the package,

Components, adhesives, interconnections and possible effects on the package from board mounting, thermal conditions, etc.

Fig.5.6: Mems sensor

GSM

Definition:

Global system for mobile communication (GSM) is a globally accepted standard for digital cellular communication. GSM is the name of a standardization group established in 1982 to create a common European mobile telephone standard that would formulate specifications for a pan-European mobile cellular radio system operating at 900 MHz

AGSMmodemisawirelessmodemthatworkswithaGSMwirelessnetwork.Awirelessmodem behaves like a dial-up modem. The main difference between them is that a dial-up modem sends and receives data through a fixed telephone line while a wireless modem sends and receives data through radiowaves.

A GSM modem can be an external device or a PC Card / PCMCIA Card. Typically, an external GSM modem is connected to a computer through a serial cable or a USB cable. A GSM modem inthe form of a PC Card / PCMCIA Card is designed for use with a laptop computer. It should be inserted into one of the PC Card / PCMCIA Card slots of a laptopcomputer.

Like a GSM mobile phone, a GSM modem requires a SIM card from a wireless carrier in order to operate. As mentioned in earlier sections of this SMS tutorial, computers use AT commands to control modems. Both GSM modems and dial-up modems support a common set of standard AT commands. You can use a GSM modem just like a dial-up modem.

In addition to the standard AT commands, GSM modems support an extended set of AT commands. These extended AT commands are defined in the GSM standards. With the extended AT commands, you can do thingslike:

- Reading, writing and deleting SMSmessages.
- Sending SMSmessages.
- Monitoring the signalstrength.
- Monitoring the charging status and charge level of thebattery.
- Reading, writing and searching phone bookentries.

The number of SMS messages that can be processed by a GSM modem per minute is very low -- only about six to ten SMS messages per minute.

GSM AT COMMANDS

- AT
- AT&D0
- AT+IFC=00
- AT+CMGF=1
- AT+CNMI=22000

AT commands features

1.Setting up your GSMmodem

Most GSM modems come with simple manual and necessary drivers. To setup your T-Modem USB, download the USB GSM Modem Quick Start (Windows) guide (460kB PDF). You would be able to send SMS from the Windows application and also setup GPRS connectivity. The GSM modem will map itself as a COM serial port on your computer.

Windows based control panel to setup GSM modem, GPRS and send SMS

2. Using theHyperTerminal

Hint::BydevelopingyourATcommandsusingHyperTerminal, itwillbeeasierforyoutodevelop your actual program codes in VB, C, Java or otherplatforms.

Go to START\Programs\Accessories\Communications\HyperTerminal (Win 2000) to create a new connection, eg."My USB GSM Modem". Suggested settings:: - COM Port :: As indicated in the T-Modem Control Tool

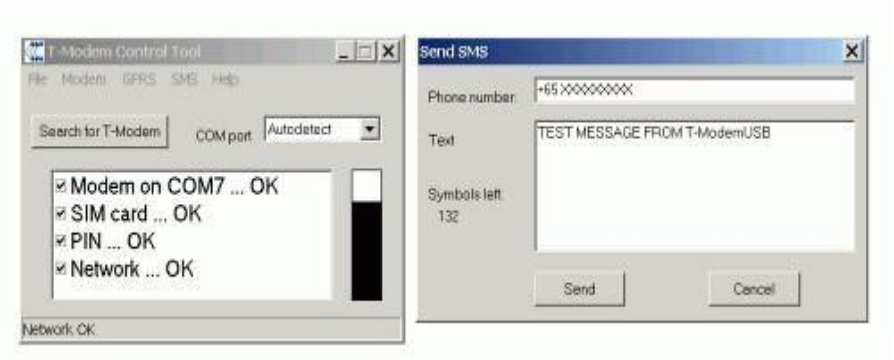

- Bits per second:: 230400 (or slower) -Data Bits : 8 - Parity : None- Stop Bits Flow Control: Hardware You are now ready to start working with AT commands. Type in "AT" and you should get a "OK", else you have not setup your Hyper Terminal correctly. Check your port settings and also make sure your GSM modem is properly connected and the drivers installed.

3. Initial setup ATcommands

We are ready now to start working with AT commands to setup and check the status of the GSM modem.

AT Returns "OK" to confirm that modem is working

AT+CPIN="xxxx" To enter the PIN for your SIM (if enabled)

AT+CREG? A "0,1" reply confirms your modem is connected to GSM network AT+CSQ

Indicates the signal strength, 31.99 ismaximum.

4. Sending SMS using ATcommands

We suggest try sending a few SMS using the Control Tool above to make sure your GSM modem can send SMS before proceeding. Let's look at the AT commands involved.

AT+CMGF=1 To format SMS as a TEXT message

AT+CSCA="+ xxxxx" Set your SMS center's number. Check with your provider.

To send a SMS, the AT command to use is AT+CMGS. AT+CMGS="+yyyyy"<Enter>> Your SMS text message here <Ctrl-Z> The "+yyyyy" is your recipients' mobile number. Next, we will look at receiving SMS via AT commands.

5. Receiving SMS using ATcommands

The GSM modem can be configured to response in different ways when it receives a SMS.

a) Immediate-whenaSMSisreceived,theSMS'sdetailsareimmediatelysenttothehostcomputer (DTE) via the +CMTcommand

AT+CMGF=1 to format SMS as a TEXT message

AT+CNMI=1, 2,0,0,0 Set how the modem will response when a SMS received

When a new SMS is received by the GSM modem, the DTE will receive the following +CMT : "+61xxxxxxxx" , , "04/08/30,23:20:00+40"
This the text SMS message sent to the modem
Your computer (DTE) will have to continuously monitor the COM serial port, read and parse the message.

b) Notification-when a SMS is received, the host computer (DTE) will be notified of the new message. The computer will then have to read the message from the indicated memory location and clear the memory location.

AT+CMGF=1 To format SMS as a TEXT message

AT+CNMI=1,1,0,0,0 Set how the modem will response when a SMS is received

When a new SMS is received by the GSM modem, the DTE will receive the following..

+CMTI: "SM",3 Notification sent to the computer. Location 3 in SIM memory

AT+CMGR=3 <Enter> AT command to send read the received SMS from modem

ThemodemwillthensendtothecomputerdetailsofthereceivedSMSfromthespecifiedmemory location (eg.3) +CMGR: "RECREAD","+61xxxxxx","04/08/28,22:26:29+40"

This is the new SMS received by the GSM modem
After reading and parsing the new SMS message, the computer (DTE) should send a AT command to clear the memory location in the GSMmodem.
AT+CMGD=3 <Enter> To clear the SMS receive memory location in the GSM modem If the computer tries to read a empty/cleared memory location, a +CMS ERROR: 321 will be sent to thecomputer.

GSM INTERFACE WITH MICROCONTROLLER

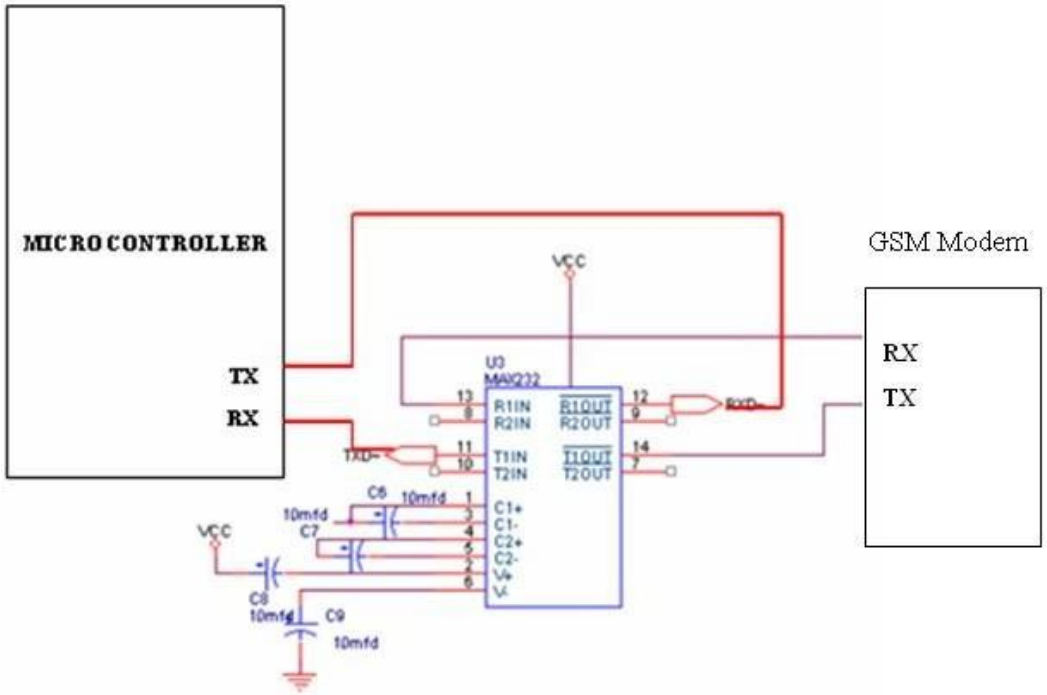

Fig.5.7: GSM Interface with microcontroller

In this project GSM Modem is interfaced with the microcontroller through rs232 interface. Since the voltage levels of the microcontroller are different with that of the GSM modem we use a voltage converter or the line driver such as MAX232 to make them rs232 compatible.

GSM and GPS both communicate through UART. Since microcontroller has only one inbuilt UART a multiplexer is used to interface GSM and GPS to the microcontroller.

RS232

The most popular serial communication standard for asynchronous communications is RS-232 (Recommended Standard – 232. This specifies the rule of how different connected devices communicate. The connected devices can either be terminals or communication equipment commonly referred as DTE & DCE.

According to RS232 interface, it requires only 3 lines i.e. Rx, TX & Ground when compared to the bunch of connectors required for parallel communication. Even though parallel communication is easier to establish, serial communication is preferred based on the costs for the communicationlines.

The EIA (Electronics Industry Association) RS232C Standard specifies & suggests a maximum baud rate of 20,000bps, and RS232D is an advanced version of the same, which allows 1.5 Mbps. The connectors specified are D-TYPE 25 pin connector and D-TYPE 9 pin connector.

There are many GSM modems available in the market and most of them are on TTL logic but someofthemuseRS232standardsandagainitbecomesaproblemtocommunicatewiltGSMmodem by using Micro controller, Arduino or any other TTL platform.MAX232 is used to solve thisproblem.

Types of MAX232:

1)“MAX232N” where “N” Represent PDIP package Style this package is easy to sold and mostwidely used.

2) MAX232D where “D” indicates the SOIC package which is difficult to sold and required a trained professional to be used correctly.

Common mistakes:

- Capacitor voltage rating is less than16.
- Interchange TX and Rx pins on one side of MAX232 at onetime.
- Distorted power supply. Use decoupling capacitor to remove distortion.
- Check all the connectionsagain.
- Check the capacitor with capacitance meter.

Use Tantalum Capacitor for betterperformance.

GPS:

What is GPS?

GPS or Global Positioning System is a satellite navigation system that furnishes location and time information in all climate conditions to the user. GPS is used for navigation in planes, ships, cars and trucks also. The system gives critical abilities to military and civilian users around the globe.GPS provide continuous real time, 3-dimensional positioning, navigation and timingworldwide.

Fig.5.8:GPS

How does GPS SystemWork

The GPS system consists of three segments:

The space segment: the GPS satellites

2) The control system, operated by the U.S.military,

3) The user segment, which includes both military and civilian users and their GPSequipment.

Space Segment:

The space segment is the number of satellites in the constellation. It comprises of 29 satellites circling the earth every 12 hours at 12,000 miles in altitude. The function of the space segment is

Utilized to route / navigation signals and to store and retransmit he route/navigation message sent by the control segment. These transmissions are controlled by highly stable atomic clocks on the satellites. The GPS Space Segment is formed by a satellite constellation with enough satellites to ensure that the users will have, at least, 4 simultaneous satellites in view from any point at the Earth surface at any time.

Control Segment:

The control segment comprises of a master control station and five monitor stations outfitted withatomicclocksthatarespreadaroundtheglobe.ThefivemonitorstationsmonitortheGPSsatellite signals and then send that qualified information to the master control station where abnormalities are revised and sent back to the GPS satellites through groundantennas.
Control segment also referred as monitor station.

User Segment:

The user segment comprises of the GPS receiver, which receives the signals from the GPS satellites and determine how far away it is from each satellite. Mainly this segment is used for the U.S military, missile guidance systems, civilian applications for GPS in almost every field. Most of the civilian uses this from survey to transportation to natural resources and from there to agriculture purpose and mapping too.

How GPS Determines a Position:

Theworking/operationofGlobalpositioningsystemisbasedonthe‘trilateration’mathematical principle.Thepositionisdeterminedfromthedistancemeasurementstosatellites.Fromthefigure,the four satellites are used to determine the position of the receiver on the earth. The target location is confirmedbythe4thsatellite.Andthreesatellitesareusedtotracethelocationplace.Afourthsatellite isusedtoconfirmthetargetlocationofeachofthosespacevehicles.Globalpositioningsystemconsists of satellite, control station and monitor station and receiver. The GPS receiver takes the information from the satellite and uses the method of triangulation to determine a user’s exactposition.

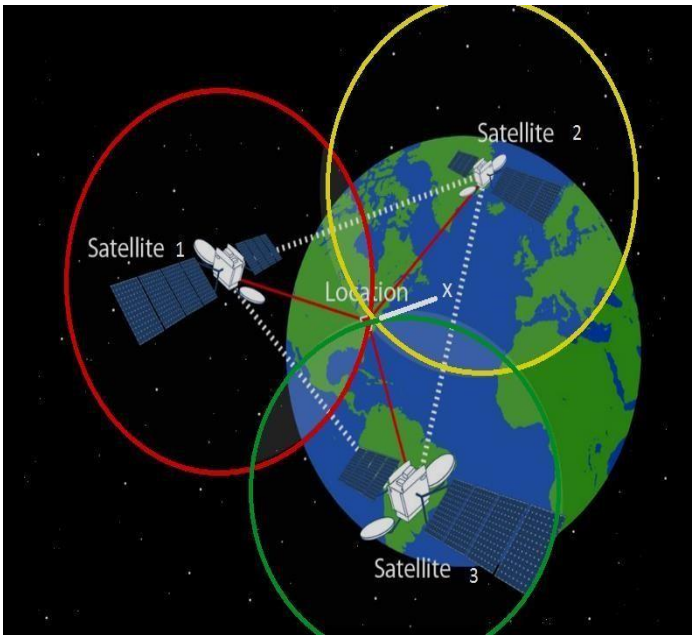

GPS is used on some incidents in several ways, such as:

1. To determine position locations; for example, you need to radio a helicopter pilot the coordinates of your position location so the pilot can pick youup.
2. To navigate from one location to another; for example, you need to travel from a lookout to the fire perimeter.
3. To create digitized maps; for example, you are assigned to plot the fire perimeter and hotspots.
4. To determine distance between two differentpoints.

3 Advantages of GPS:

- GPS satellite based navigation system is an important tool for military, civil and commercialusers
- Vehicle tracking systems GPS-based navigation systems can provide us with turn by turndirections
- Very highspeed

2 Disadvantages of GPS:

- GPS satellite signals are too weak when compared to phone signals, so it doesn’t work as well indoors, underwater, under trees, etc.
- The highest accuracy requires line-of-sight from the receiver to the satellite; this is why GPS doesn’t work very well in an urbanenvironment.

Using a GPS Receiver:

TherearesseveraldifferentmodelsandtypesofGPSreceivers.WhileworkingwithaGPSreceiver it is important to have:

- A compass and amap.
- A downloaded GPS cable.
- Some extrabatteries.
- Knowledge about the memory capacity of the GPS receiver to prevent loss of data, decrease in accuracy of data, or otherproblems.
- An external antenna whenever possible, especially under tree canopy, in canyons, or whiledriving.
- A set up GPS receiver according to incident or agency standard regulation; coordinatesystem.
- Notes that describe what you are saving in thereceiver.

GPS Error

There are many sources of possible errors that will degrade the accuracy of positions computed by a GPS receiver. The travel time taken by the GPS satellite signals can be changed by atmospheric effects; when a GPS signal passes through the ionosphere and troposphere it is refracted, causing the speed of the signal to be different from the speed of a GPS signal in space. Another source of error is noise, or distortion of the signal which causes electrical interference or errors inherent in the GPS receiveritself.

The information about satellite orbits will also cause errors in determining the positions, because the satellites are not really where the GPS receiver “thought” based on the information it received when it determine the positions. Small variations in the atomic clocks on board the satellites can translate to large position errors; a clock error of 1 nano second translates to 1 foot or 3 meters user error on the ground. A multipath effect occurs when signals transmitted from the satellites bounce off a reflective surface before getting to the receiver antenna. During this process, the receiver gets the signal in straight line path as well as delayed path (multiplepaths).
The effect is similar to a ghost or double image on a TV set.

Geometric Dilution of Precision (GDOP)

Satellite geometry can also affect the accuracy of GPS positioning. This effect is refers as Geometric Dilution of Precision (GDOP). Which is refers to where the satellites are in related to one another, and is a measure of the quality of the satellite configuration. It can be able to modify other GPSerrors.MostGPSreceiversselectthesatelliteconstellationthatwillgivetheleastuncertainty,the best satellitegeometry.

GPS receivers usually report the quality of satellite geometry in terms of Position Dilution of Precision, or PDOP. PDOP are of two types, horizontal (HDOP) and vertical (VDOP) measurements (latitude, longitude and altitude). We can check the quality of the satellite positioning the receiver is currently available by the PDOP value. A low DOP indicates a higher probability of accuracy, and a high DOP indicates a lower probability of accuracy. Another term of PDOP is TDOP (Time Dilution of Precision). TDOP refers to satellite clock offset. On a GPS receiver can set a parameter known as thePDOPmask.ThiswillcausethereceivertoignoresatelliteconfigurationsthathaveaPDOPhigher than the limitspecified.

Selective Availability (SA):

Selective Availability occurs when the DOD intentionally degraded; the accuracy of GPS signals is introducing artificial clock and ephemeris errors. During the implementation of SA, it was the largest component of GPS error, causing error of up to 100 meters. SA is a component of the Standard Positioning Service (SPS).

Lcd:

This is an example for the Parallel Port. This doesn't use the Bi-directional feature found on newer ports, thus it should work with most, if no all Parallel Ports. It however doesn't show the use of the Status Port as an input. These modules are preferred over seven segments and other multi segment

LEDs. There as on being: LCDs are economical; easily programmable; have no limitation of displaying special & even custom characters (unlike in seven segments), animations and soon.

The command register stores the command instructions given to the LCD. A command is an instruction even to LCD to do a predefined task like initializing it, clearing its screen, setting the cursor position, controlling display etc. The data register stores the data to be displayed on the LCD. The data is the ASCII value of the character to be displayed on theLCD.

Fig.5.9: LCD display

LCD BACKGROUND:

The 44780 standard requires 3 control lines as well as either 4 or 8 I/O lines for the data bus. The user may select whether the LCD is to operate with a 4-bit data bus or an 8-bit data bus. If a 4-bit data bus is used the LCD will require a total of 7 data lines (3 control lines plus the 4 lines for thedata bus). If an 8-bit data bus is used the LCD will require a total of 11 data lines (3 control lines plus the8 lines for the data bus). The three control lines are referred as EN, RW and RS

EN: The **EN** line is called "Enable." This control line is used to tell the LCD that you are sending it data. To send data to the LCD, your program should make sure this line is low (0) and then set the other two control lines and/or put data on the data bus. When the other lines are completely ready, bring **EN** high (1) and wait for the minimum amount of time required by the LCD datasheet (this varies from LCD to LCD), and end by bringing it low (0) again.

RS: The **RS** line is the "Register Select" line. When RS is low (0), the data is to be treated as a command or special instruction (such as clear screen, position cursor, etc.). When RS is high (1), the data being sent is text data which should be displayed on the screen. For example, to display the letter "T" on the screen you would set RShigh.

RW: The**RW** line is the "Read/Write" control line. When RW is low (0), the information on the data bus is being written to the LCD. When RW is high (1), the program is effectively querying (orreading)

the LCD. Only one instruction ("Get LCD status") is a read command. All others are write commands--so RW will almost always be low.

Finally, the data bus consists of 4 or 8 lines (dependingonthemodeofoperationselectedbytheuser). In the case of an 8-bit data bus, the lines are referred to as DB0, DB1, DB2, DB3, DB4, DB5, DB6, and DB7.

LCD PIN OUT

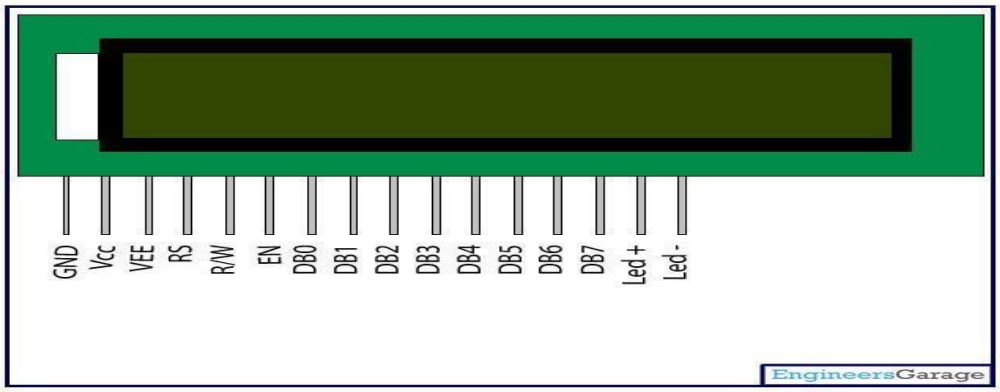

Fig.5.10: Pindiagram

Pin No:	Name	Function
1	**VSS**	This pin must be connected to the ground
2	**VCC**	Positive supply voltage pin (5V DC)
3	**VEE**	Contrast adjustment
4	**RS**	Register selection
5	**R/W**	Read or write
6	**E**	Enable
7	**DB0**	Data
8	**DB1**	Data
9	**DB2**	Data
10	**DB3**	Data
11	**DB4**	Data
12	**DB5**	Data
13	**DB6**	Data
14	**DB7**	Data
15	**LED+**	Back light LED+
16	**LED-**	Back light LED

INTERFACING LCD WITH AN ARDUINO

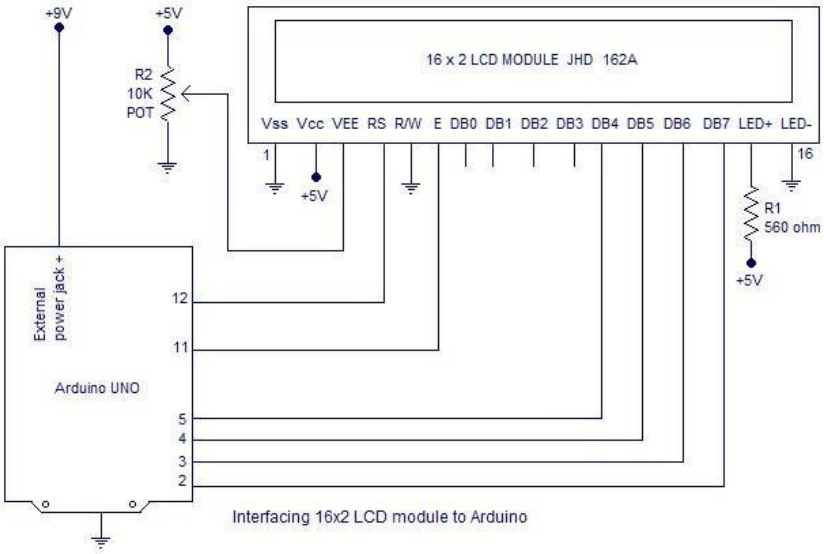

Fig.5.11: Interfacing 16x2 LCD module to Arduino

The circuit diagram of interfacing LCD to Arduino for displaying a text message is shown above. RS pin of the LCD module is connected to digital pin 12 of the Arduino. R/W pin of the LCD is grounded. Enable pin of the LCD module is connected to digital pin 11 of the Arduino. In this project, the LCD module and Arduino are interfaced in the 4-bit mode. That means only four of the digital input lines (DB4 to DB7 of the LCD are used). This method is very simple, requires less connections and you can almost utilize the full potential of the LCD module. Digital lines DB4, DB5, DB6 and DB7 are interfaced to digital pins 5, 4, 3 and 2 of the Arduino. The 10K potentiometer is used for adjusting the contrast of the display. 560 ohm resistor R1 limits the current throughthebacklightLED.TheArduinocanbepoweredthroughtheexternalpowerjackprovidedontheboard.
+5V required in some other parts of the circuit can be tapped from the 5V source on the Arduino board. The Arduino can be also powered from the PC through the USB port.

Software requirements:

Download Arduino Software

You'll need to download the Arduino Software package for your operating system from the Arduino download page.

When you've downloaded and opened the application you should see something like this:

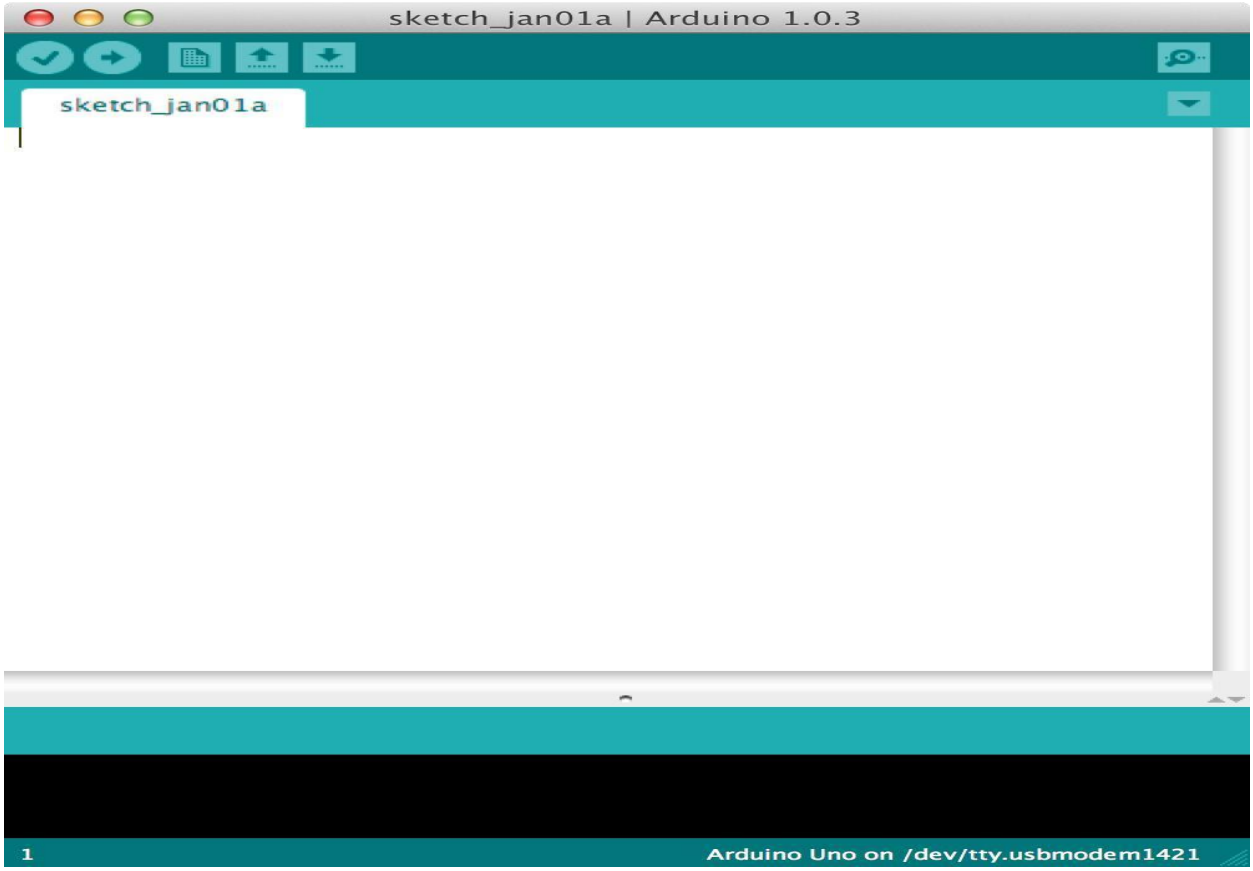

This is where you type the code you want to compile and send to the Arduino board.

The Initial Setup

We need to setup the environment to **Tools** menu and select **Board**.

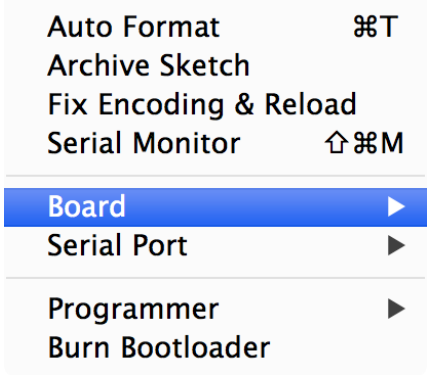

Tools Menu < Board

Then select the type of Arduino you want to program, in our case it's the **Arduino Uno**.

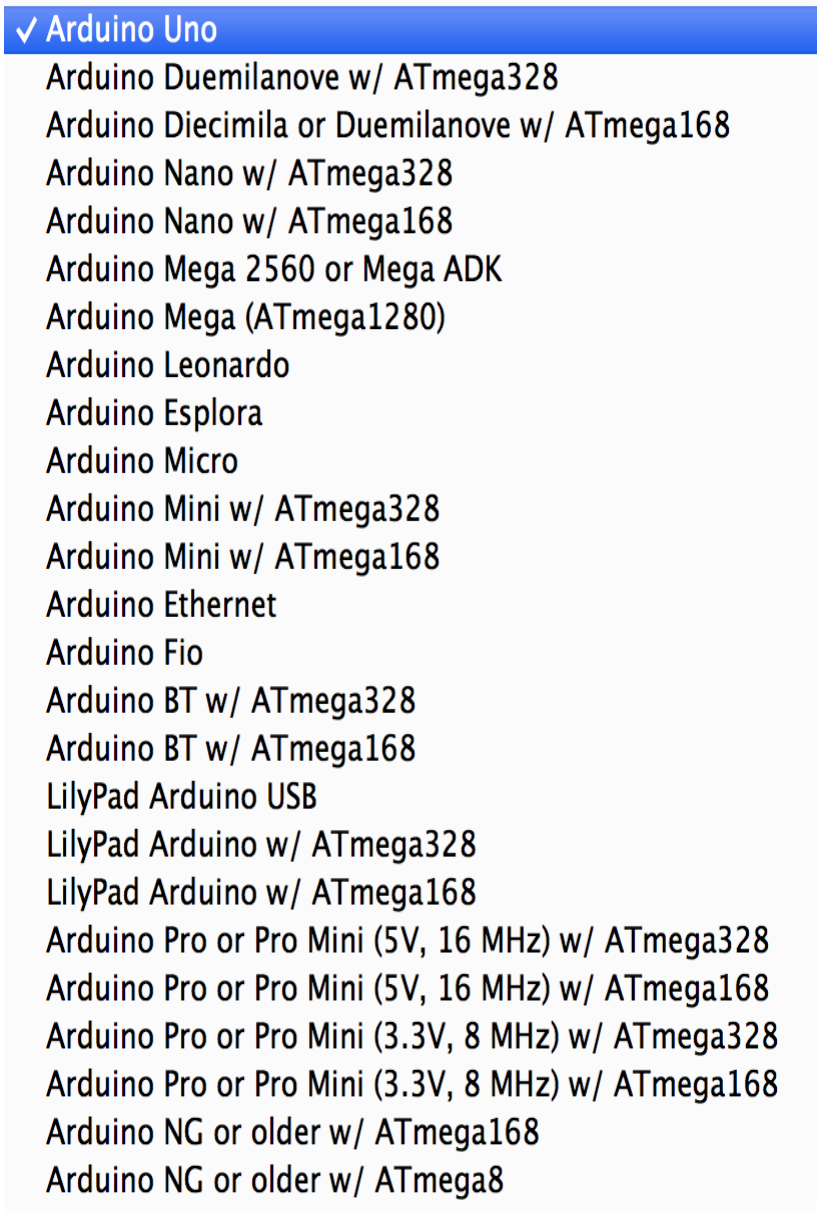

Arduino Uno

The Code

The code you write for your Arduino are known as **sketches**. They are written in **C++**.

Every sketch needs two *void type functions*, `setup()` and `loop()`. A void type function doesn't return any value.

The `setup()` method is ran once at the just after the Arduino is powered up and the `loop()` method is ran continuously afterwards. The `setup()` is where you want to do any initialization steps, and in `loop()` you want to run the code you want to run over and over again.

So, your basic sketch or program should look like this:

```

void setup()
{
}
void loop()
{
}

```

If you notice on the top edge of the board there's two black rectangles with several squares in. These are called **headers**. Headers make it easy to connect components to the the Arduino. Where they connect to the board is called **pins**. Knowing what pin something is connected to is essential for programming an Arduino.

The pin numbers are listed next to the headers on the board in white.

The onboard LED we want to control is on pin 13.

In our code above the `setup()` method let's create a variable called `LedPin`. In C++ we need to state why type our variable is beforehand, in this case it's an integer, so it's of type `int`.

```
int ledPin = 13;
void setup()
{
}
void loop()
{
}
```

Each line is ended with a semicolon(`;`).
and second, whether it's an input or output pin. Since we're dealing with an output we need to set it to a constant called `OUTPUT`. If you were working with a sensor or input it would be `INPUT`.

```

int ledPin = 13;
void setup()
{
        pinMode(ledPin, OUTPUT);
}
void loop()
{
}

```

Next we want to compile to machine code and deploy or *upload* it to the Arduino.

Compiling the Code

Ifthisisyourfirsttimeyou'veevercompiledcodetoyourArduinobeforepluggingitintothecomputer go to the **Tools** menu, then **Serial Port** and take note of what appearsthere.

Here's what mine looks like before plugging in the Arduino UNO:

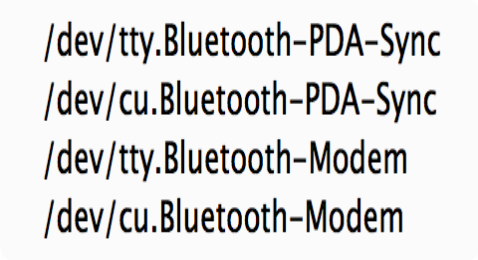

Plug your Arduino UNO board in to the USB cable and into your computer. Now go back to the **Tools > Serial Port** menu and you should see at least 1 new option. On my Mac 2 new serial ports appear.

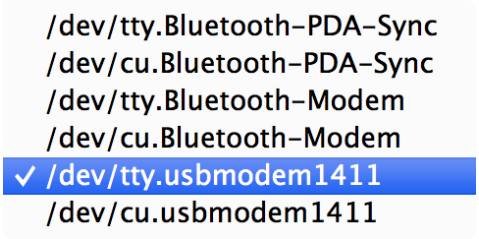

They *tty*and *cu* are two ways that computers can talk over a serial port. Both seem to work with the Arduino software so I selected the tty.* one. On Windows you should see *COM* followed by a number. Select the new one that appears.

Once you have selected your serial or COM port you can then press the button with the arrow pointing to the right.

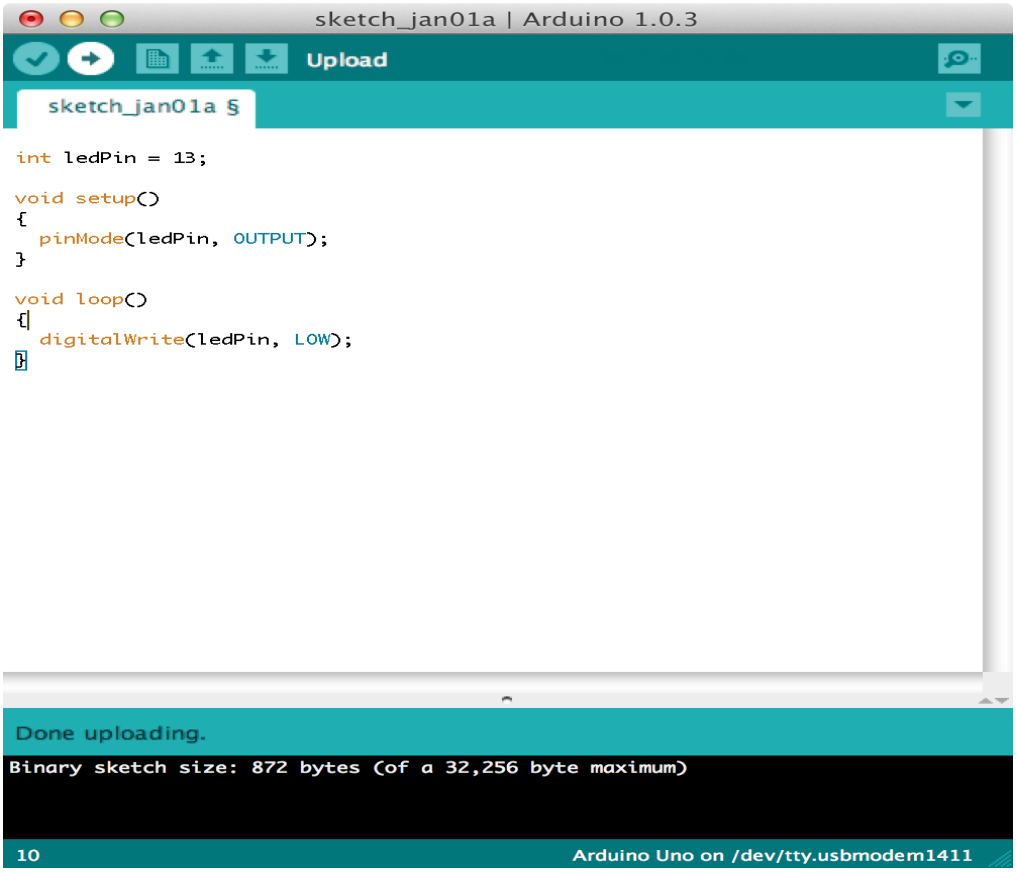

Once that happens you should see the **TX** and **RX** LEDs below the **L** LED flash. This is the communication going on between the computer and the Arduino. The **L** may flicker too.

Once this dance is complete your program should be running. And your LED should be off.

Now let's try and switch it on using the `HIGH`constant.

CHAPTER 6

UML DIAGRAMS

Activity Diagram:

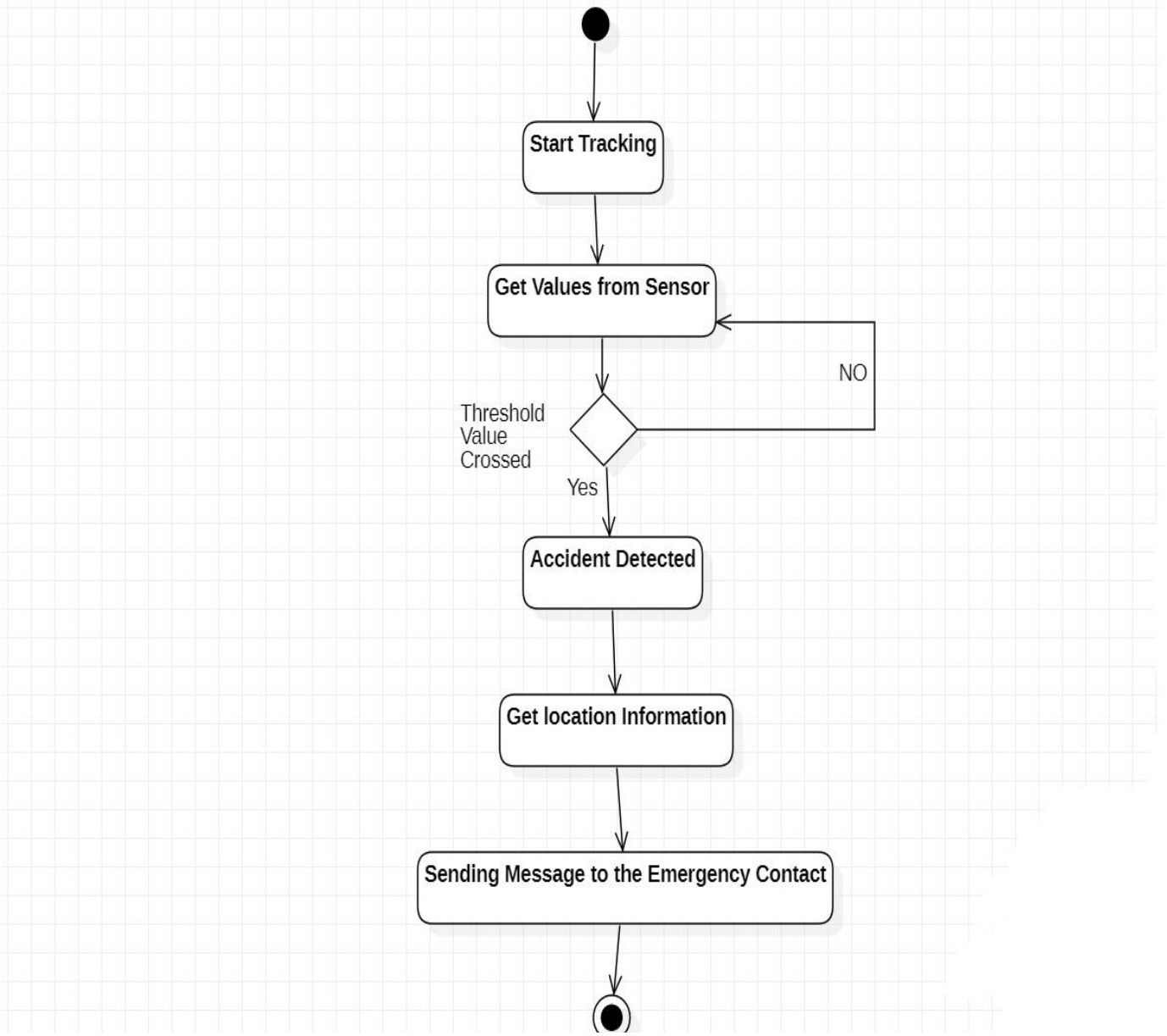

Sequence Diagram:

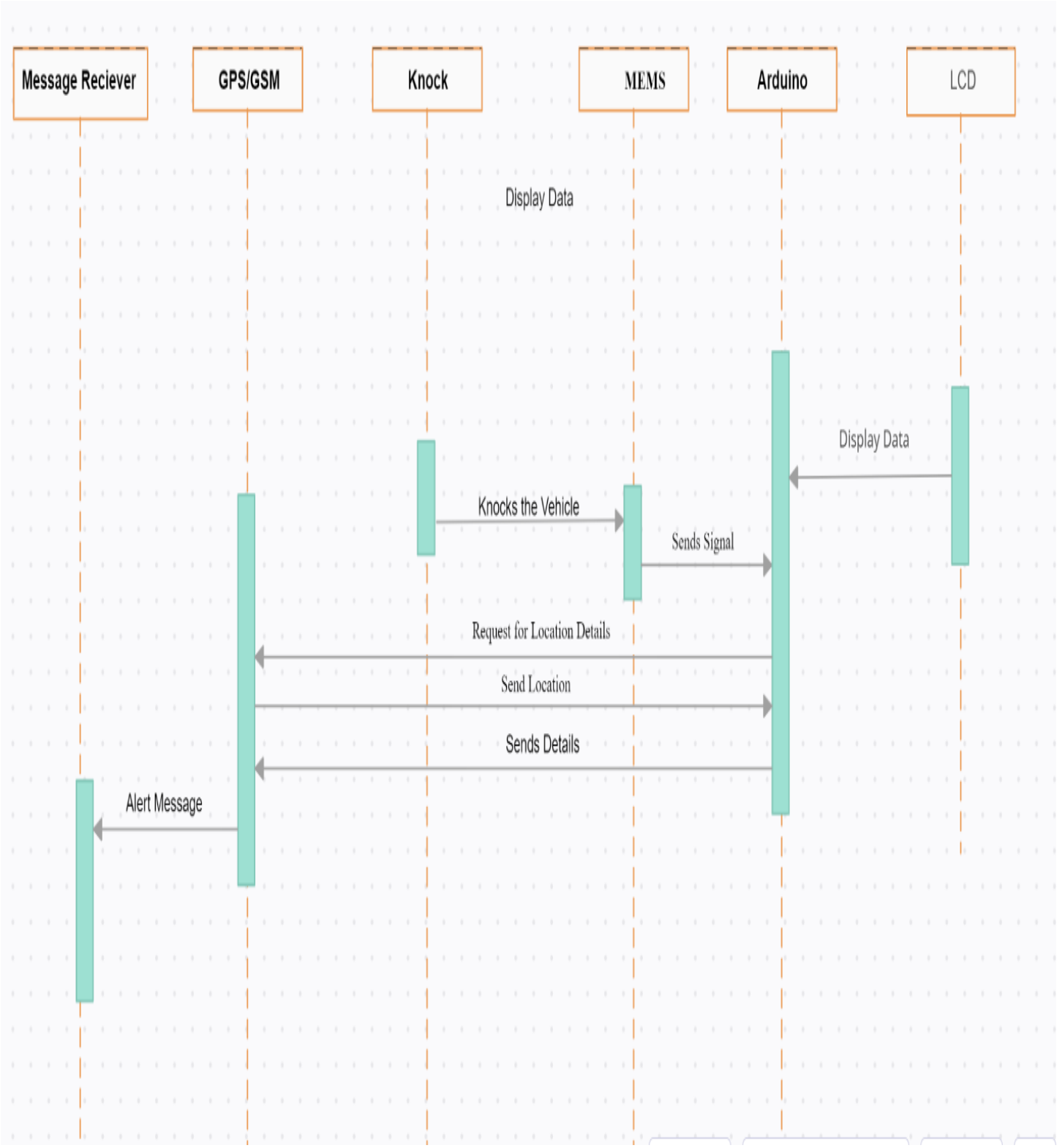

Use Case Diagrams:

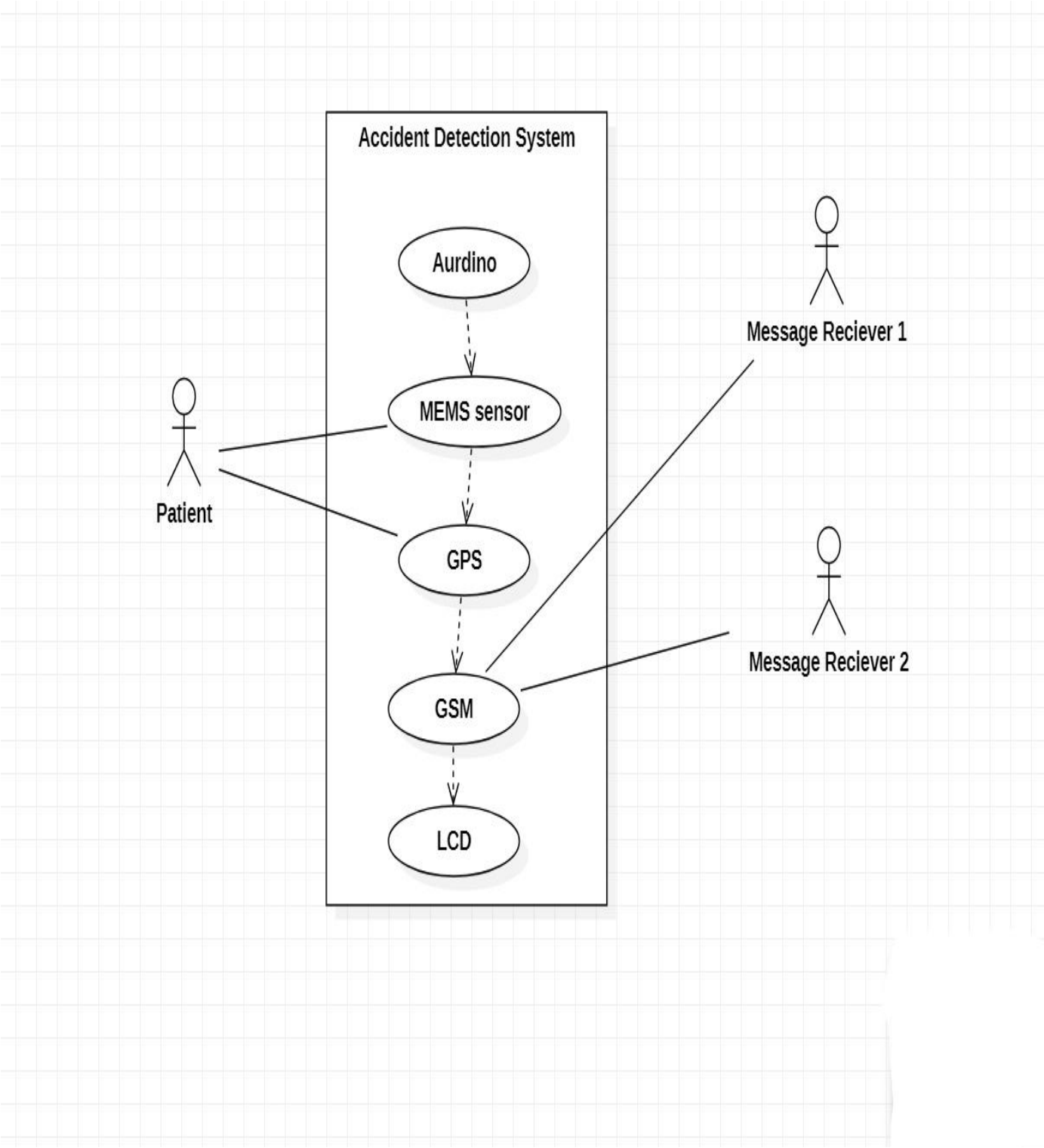

CHAPTER 7

CONCLUSION

The Expected performance is achieved through implementation of the proposed system. The sensor and other required components are distributed throughout the car providing more optimal result to detect accidents. The proposed system can also be used for traffic estimation and system performance estimation to prevent loss of life to its maximum.

References:

1. Vikram Singh Kushwaha, Deepa Yadav, Abuyeed Topinkatti, Amrita Kumari. “Car Accident Detection System using GPS And GSM”,Volume

2 , Issue 1(Jan-Feb 2015), PP12-17 2.Nimisha Chaturvedi, Pallika Srivastava . “Automatic Vehicle Accident Detection and Messaging System Using GSM and GPS Modem “, Volume: 05 Issue: 03 | Mar-2018

3. C.Prabha, R.Sunitha, R.Anitha. “Automatic Vehicle Accident Detection and Messaging System Using GSM and GPS Modem”, Vol. 3, Issue 7, July2014

4. HoangDatPham,MichealDrieberg,ChiCuongNguyen,“Developmentofvehicletrackingsystem using GPS and GSM modem “,Conference: 2013 IEEE Conference on Open Systems(ICOS)

5. Lih-JenKau, Member, IEEE, and Chih-Sheng Chen, “A Smart Phone – Based Pockert Fall Accident Detection, Positioning and Rescue System”, Dec2013.

6. G. Acampora, D. J. Cook, P. Rashidi, A. V. Vasilakos, “A Survey on Ambient Intelligence in Healthcare”, Proceedings of the IEEE, pp. 2470-2494, Vol. 101, No. 12, Dec.2013.

[31]Akbarzhon Madaminov, “Recommendation Systems”, Engpaper Journal

[32]Aathi oli.S , “REVIEW PAPER ON PHISHING ATTACKS”, Engpaper Journal

[33]Rania Fernando, “IoT based – Street Light Controlling System”, Engpaper Journal

[34]K. SAI BHARGAV, V. RAJENDRA, “Study on Data Structures for Machine Learning”, Engpaper Journal

[35]Brundha P, Guruprasad K N, Amith V Hiremath,Sirisha R, Chandrakanth G Pujari , “Face Detection Based Smart Attendance System Using Haar Cascade Algorithm”, Engpaper Journal

[36]Afsana Nadaf , “RFID BASED LIBRARY MANAGEMENT SYSTEM”, Engpaper Journal

[37]Mr. Vedant Thube, Neha Thakur, Mr. Siddhesh Balsaraf,Ms. Priyanka Hanchate, Dr. S. D. Sawarkar , “Accident Prevention using Eye Drowsiness & Yawning Detection”, Engpaper Journal

[38]Abhishek A Hishobkar, Rutuja Gaonkar, Jagdish Chintamani , “DIGITAL DIARY”, Engpaper Journal

[39]Pooman Suryavanshi, Aryan Ghadge, Manali Kharat , “TAXI SERVICE for VISUALLY IMPAIRED”, Engpaper Journal

[40]Mr. Pankaj yadav, Shila Jawale, Mr. Ashutosh Mahadik, Ms. Neha Nivalkar, Dr. S. D. Sawarkar , “NEWS ARTICLES CLASSIFICATION”, Engpaper Journal

[41]Rahul Chavan, Manvee Bhoir, Gaurav Sapkale, Anita Mhatre, “Smart Tourist Guide System”, Engpaper Journal

[42]Rutik Desai, Akash Jadhav,Suraj Sawant ,Neha Thakur , “Accident Detection Using ML and AI Techniques”, Engpaper Journal

[43]Anagha Vishe,Akash Shirsath, Sayali Gujar, Neha Thakur , “Student Attendance System using Face Recognition”, Engpaper Journal

[44]Ms.Sayali Patekar, Shila jawale, Ms.Pranali Kurhade, Mr.Shubham Khamkar , “Smart Classroom Application”, Engpaper Journal

[45]DOSHI SAKSHI, DEVYANI CHAUDHARI, POOJA GAIKWAD, RUTUJA CHABUKSWAR,MRS. SUJATA KOLHE, “TOURISM SIMPLIFIED THROUGH VOICE”, Engpaper Journal

[46]Afreen Fathima,Samreen Jameel, Pathan Ahmed khan , “ACCIDENT DETECTION AND ALERTING SYSTEM”, Engpaper Journal

[47]Suman Zareen, Tuba Masood, Pathan Ahmed khan, “E-Commerce Web Application with Augmented Reality”, Engpaper Journal

[48]Lok Shan CHAN, “Selection of Waterfall and Agile Methodologies in Software Testing”, Engpaper Journal

[49]Barve Rutu, “CLOUD COMPUTING SYSTEM FOR GAMING”, Engpaper Journal

[50]Harshvardhan Singh, “Machine Learning: Fake News Blocking”, Engpaper Journal

[51]M.Al Batahari, “SERVERS ROOM MONITORING SYSTEM USING IOT”, Engpaper Journal

[52]AYUSHI ANKITA RAKSHIT, “VIRTUAL MASTER USING PYTHON”, Engpaper Journal

[53]Baldeep Kaur, “REAL TIME SLEEP DROWSINESS DETECTION USING FACE RECOGNITION”, Engpaper Journal

[54]Suchitav Khadanga, “Two Stage CMOS Operational Amplifier From Specification to Design”, Engpaper Journal

[55]nidhi sharma, “Introduction to Remote Sensing”, Engpaper Journal

[56]Rohith N Reddy, “COVID-19 Detection using SVM Classifier”, Engpaper Journal

[57]Swapnil Kole, “COVID-19 Database on Consortium Blockchain”, Engpaper Journal

[58]TejalLengare, PallaviSonawane, PrachiGunjal, ShubhamDhire, Prof.Shaikh.J.N , “Accident Detection & Avoidance System in Vehicles”, Engpaper Journal

[59]Abhishek Pawshekar, Deepti More, Akash Khade, Pratiksha Wagh, Ganesh Ubale, “Augmented Reality: to converting and placing object into 3D model”, Engpaper Journal

[61]Prof.Ubale.G.S, Pranjal Adhav,Pooja Gaikwad, Sushama Nadavade ,Pooja Kale , “Iot based Bridge Monitoring System”, Engpaper Journal

[62]Divya Deewan, Priyanka Maheshwari, Sanjay Jain, “A REVIEW OF BATTERY-SUPERCAPACITOR HYBRID ENERGY STORAGE SYSTEM SCHEMES FOR POWER SYSTEM APPLICATION”, Engpaper Journal

[63]Prof.Ansari.M.B, Pranjal Adhav,Pooja Gaikwad,Sushama Nadavade,Pooja Kale, “Survey on MyHelper IOT based Bridge Monitoring System”, Engpaper Journal

[64]Shreyas.S.J, Saddam hussain, Chaithra E, “COMPARATIVE STUDY ON SEISMIC RESPONSE OF MASONRY INFILLED RC FRAME BUILDINGS AND MIVAN BUILDINGS WITH DIFFERENT PERCENTAGE OF WALL OPENINGS”, Engpaper Journal

[65]Yusuf Ali Hassan, “Somali Power-Grid Significant Challenges”, Engpaper Journal

[66]Ahmed N. Elhefnawy, “Refractive IR Objective Optical Design Operating in LWIR band For Military Observation Applications”, Engpaper Journal

[67]S MANJULA, D SELVATHI and SUCHITAV KHADANGA, “Design of low-power CMOS transceiver front end for 2.4-GHz WPAN applications”, Engpaper Journal

[68]Suchitav Khadanga, “Fabrication of MEMS Pressure Sensor on thin film membrane”, Engpaper Journal

[69]Suchitav Khadanga and Dr. K.R.Suresh Nair, “An Introduction to Bluetooth”, Engpaper Journal

[70]Suchitav Khadanga and S. Ahmad, “DESIGN AND FABRICATION OF LOW COST MICROWAVE OSCILLATOR”, Engpaper Journal

[71]Ameen Ahmed, Noushad S, Suchitav Khadanga, K.R.Suresh Nair, P.K.Radhakrishnan, “DEVELOPMENT OF LOW PHASE NOISE SMALL FOOT PRINT SURFACE MOUNT VOLTAGE CONTROLLED OSCILLATOR”, Engpaper Journal

[72]Suchitav Khadanga , “Synchronous programmable divider design for PLL Using 0.18 um cmos technology”, Engpaper Journal

[73]Kavya.G.R, Shivaraju.G.D, Dr. T V Mallesh, S R Ramesh, “PROGRESSIVE COLLAPSE RESISTANCE OF FLAT SLAB BUILDING”, Engpaper Journal